32 901 AL1 **ESSENCE SINGLE-LEVER BASIN MIXER 1/2" XL-SIZE**

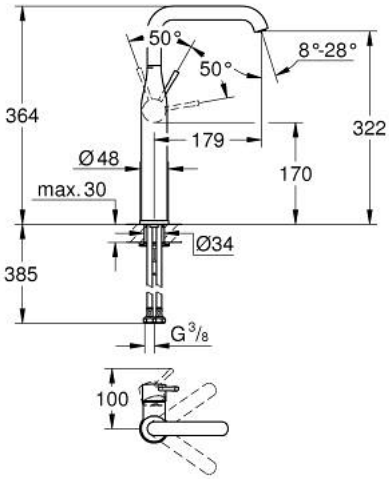

PRODUCT DESCRIPTION

- Colour: Brushed hard graphite
- single hole installation
- metal lever
- For free-standing basins
- GROHE SilkMove 28 mm ceramic cartridge
- With temperature limiter
- GROHE LongLife finish
- GROHE AquaGuide adjustable mousseur
- GROHE FastFixation Plus rapid installation system
- Swivel tubular spout with mousseur and stop limiter
- Smooth body
- flexible connection hoses
- maximum flow rate (at 3 bar): 6.6 l/min
- min. recommended pressure 1.0 bar